MAT REPAIR

Best practices.

A practical guide to identifying the best candidates for mat repair and preparing a shipment for NuMat remanufacturing.

DAMAGED MAT

Save money.

Prevent unnecessary waste.

Prudential Overall Supply®

NuMat

01 / LEARN

Repair decisions, made simple.

Repairing useful inventory saves money, prevents unnecessary waste, and returns renewed mats to route inventory.

$

SAVE MONEY

Repair useful inventory instead of replacing it unnecessarily.

-

PREVENT WASTE

Keep repairable mats and usable material out of the waste stream.

+

KEEP MATS WORKING

Return renewed mats to route inventory for continued service.

HOW NUMAT REMANUFACTURES

INSPECT > REPAIR > FINISH > RETURN

BEFORE

Damaged border with serviceable carpet pile.

AFTER

Finished border and ready for route inventory.

02 / FIELD CHECK

Identify damaged mats before they go back to the customer.

Most damaged mats are removed from service for minor damage like torn borders, small tears, or rippling.

All of the most common types of damage can be repaired with our service. Your team is already filtering for damaged mats in every batch so the next step is to replace the garbage can with a pallet or shipping cage for collection.

Prioritize newer, high value inventory in large sizes. Logo mats are also great candidates for our service because of their cost premium and lead time for replacement.

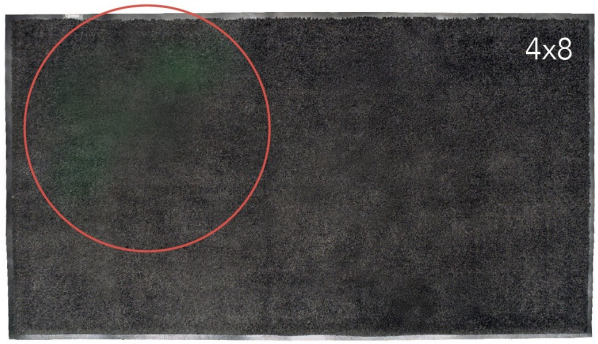

RE-SIZE CANDIDATE

Stained but with plenty of good carpet for a 3x4.

FOCUS ON LARGER SIZES

Prioritize repairable 4 x 6 and 3 x 10 mats.

REPAIRABLE DAMAGE

Send mats with localized damage for evaluation.

HIGH-VALUE MATS

Newer and logo mats are strong candidates for repair.

03 / SORT

Can we fix it?

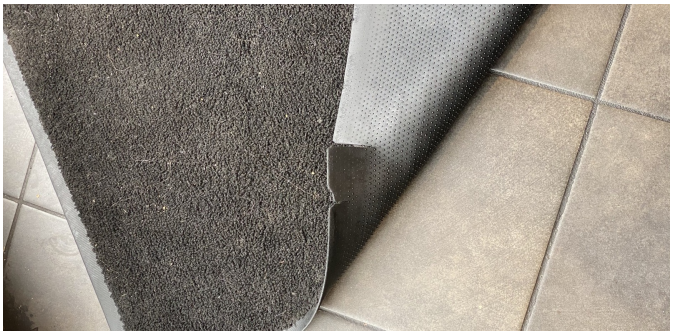

+ Send it

Border wear

Worn or damaged borders can be replaced.

Slit or tear

Interior slits and tears can be permanently repaired.

Rippled rubber

Sound pile with rippling is a repair candidate.

Large damaged mat

A smaller trade size may be recovered.

x Do NOT Send

Scraper or all-rubber mat

Kitchen and anti-fatigue all-rubber mats cannot be remanufactured.

Pile separation

Textile-top separation cannot be repaired.

Wet or dirty

Wash and fully dry before shipping.

Low salvage value

Avoid small mats with major interior or textile-top damage.

04 / PREPARE

Stack and Ship to Save.

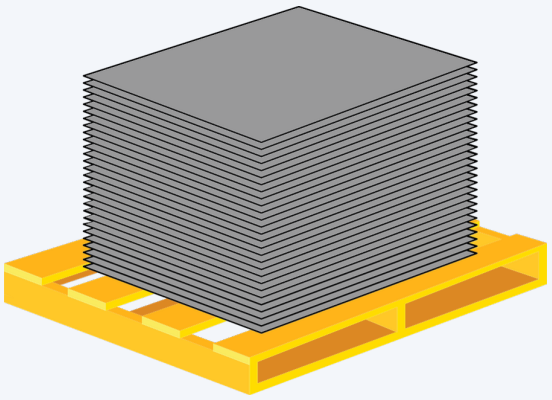

FLAT OR FOLDED

42 INCHES OR LESS

01 Build a dense load

Use a standard skid in good working condition. Neatly stack damaged mats flat or folded to a height of 42 inches or less, then thoroughly shrink-wrap the load. If using a mat cage, fill it completely before shrink-wrapping.

02 Prioritize value

Send higher-value repairable mats for better results. For standard mats, prioritize 4 x 6 and 3 x 10. All sizes of repairable textile-top mats may be considered for evaluation.

03 Ship on your schedule

Send at least two skids of damaged mats for the best results and cost savings. Consider shipping once per month if possible.

Repaired and ready to rent again.

NuMat Systems | 334-319-9200 | sales@numatsystems.com

More visual examples: prudentialmatrepair.com and the NuMat Visual Repair Guide

Prudential Overall Supply and associated marks are the property of Prudential Overall Supply. Any product names, logos, brands, and other trademarks featured or referred to within this guide are the property of their respective trademark holders. These trademark holders are not affiliated with **NuMat Systems**, our products, or our website outside of the mat repair activity discussed herein.

REPAIR GUIDE

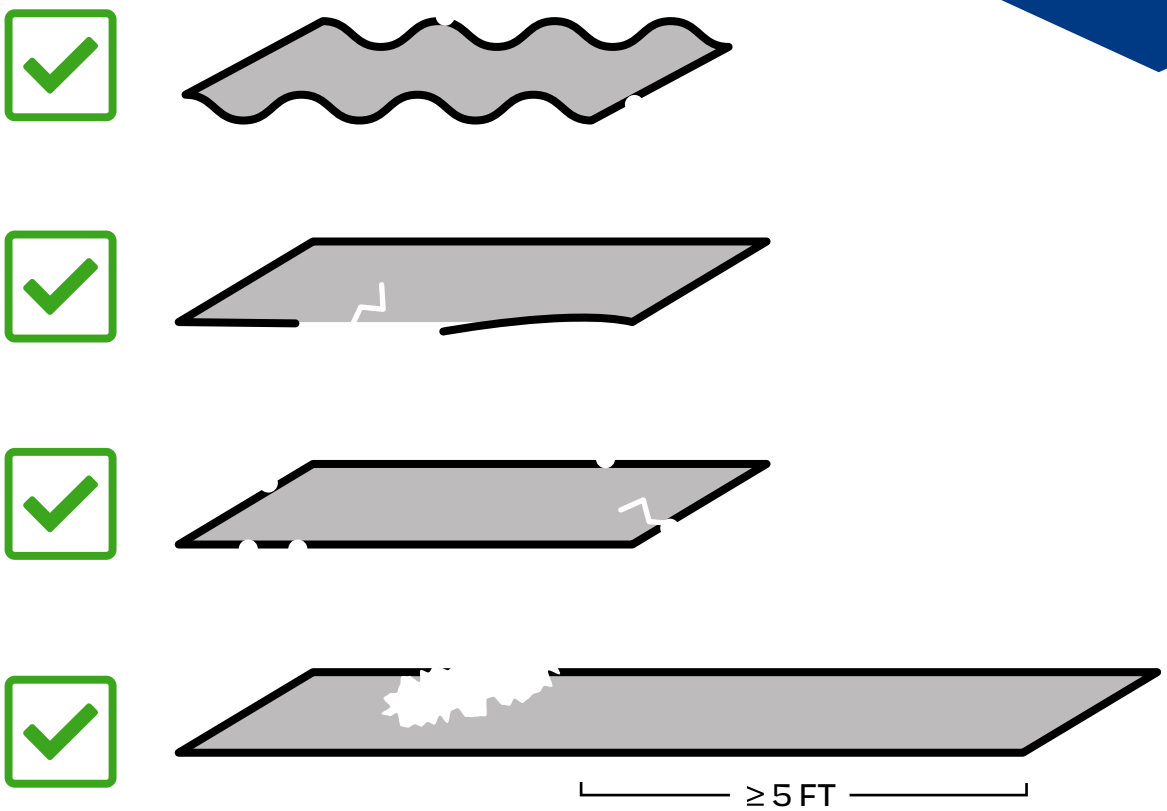

SEVERE DAMAGE
WITH NO USEFUL AREA

(REMAINING AREA IS LESS THAN SMALLEST TRADE SIZE)

DAMAGED PILE, STAINS,
WET OR MOLDY

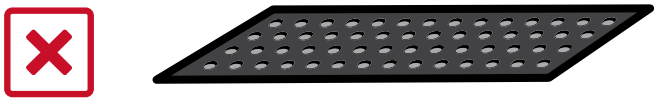

MOLDED RUBBER, SCRAPERS, FOAM

SALES@NUMATSYSTEMS.COM
334-319-9200
NUMATSYSTEMS.COM

66276 HWY 22
ROANOKE, AL 36274
USA